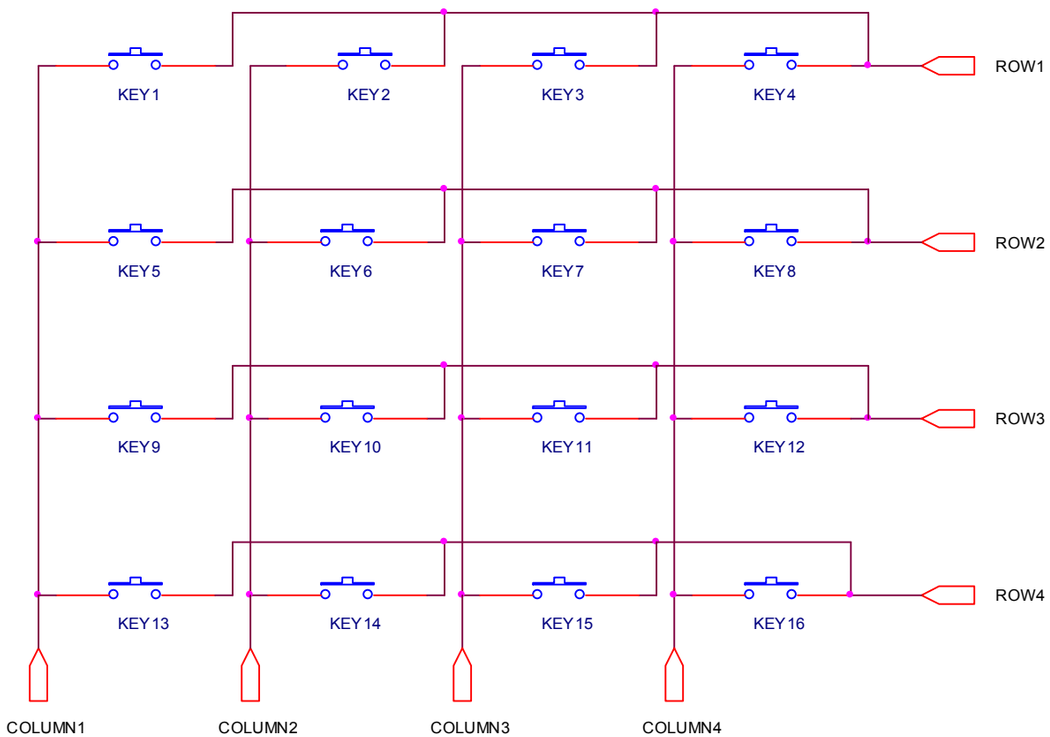

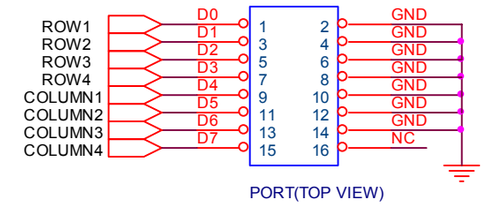

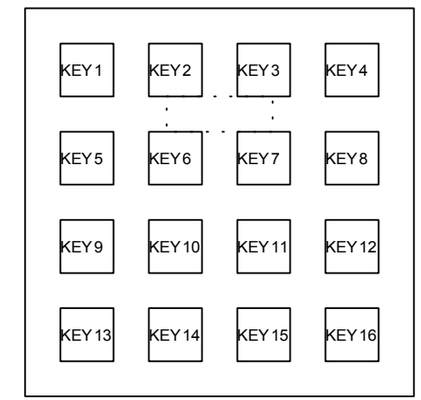

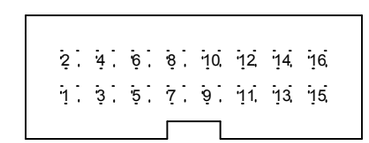

IDC16 (TOP VIEW)

Title KEY4X4		
Size A	Document Number ERE CO.,LTD. www.ere.co.th	Rev A
Date: Monday, January 19, 2004	Sheet 1 of 1	